ALLEGION

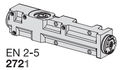

EN 2-5
2721

2710/053/00
Issue No. 5

1 2 3 4

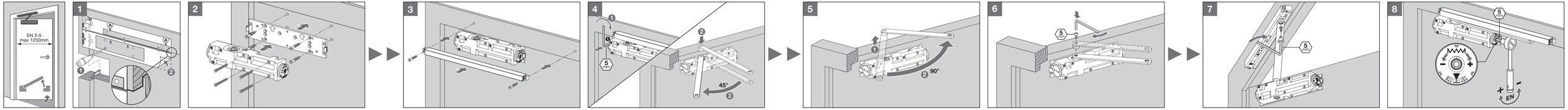

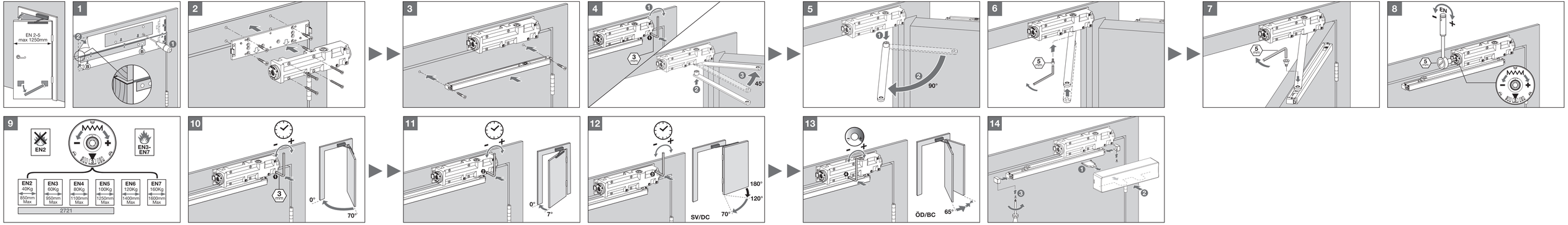

10212 ZINS-BB694

ALLEGION

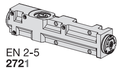

EN 2-5
2721

2710/053/00
Issue No. 5
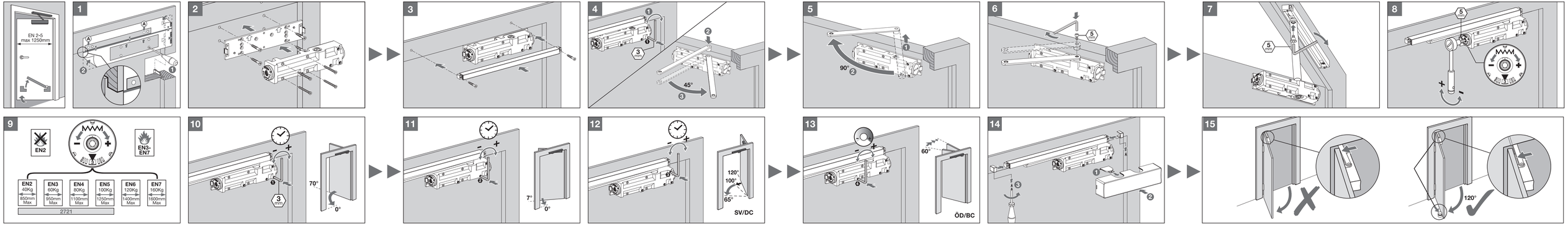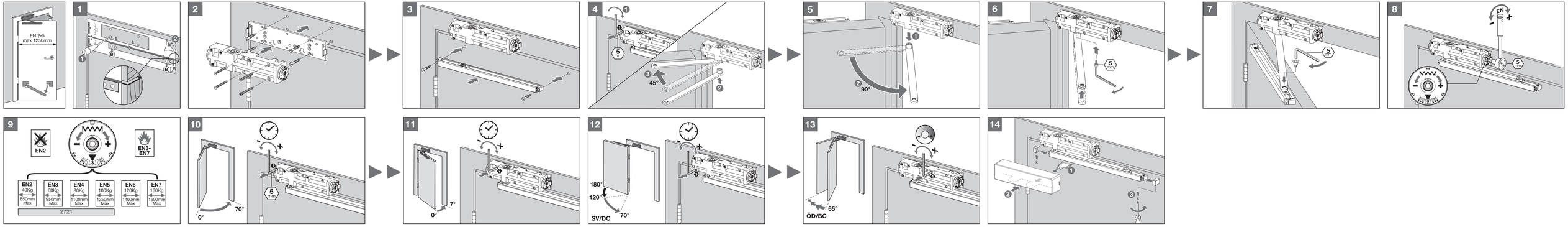
1 2 3 4